3” -12” HYDRAULIC LINE STOP MACHINE

72” Travel-3” 150# to 12” 150# and 3” 600# to 12” 600#

PRESSURE/TEMPERATURE LIMITS

Maximum Operating Pressure @ 100°F

72” Travel ----------1480psi

Maximum Operating Temperature

72” Travel ---------- -20 to 180°F @ 1376psi

Control Bar Diameter ---------2”

Control Bar Bolt Size ---------- ⅜” x 3” Shoulder Bolt

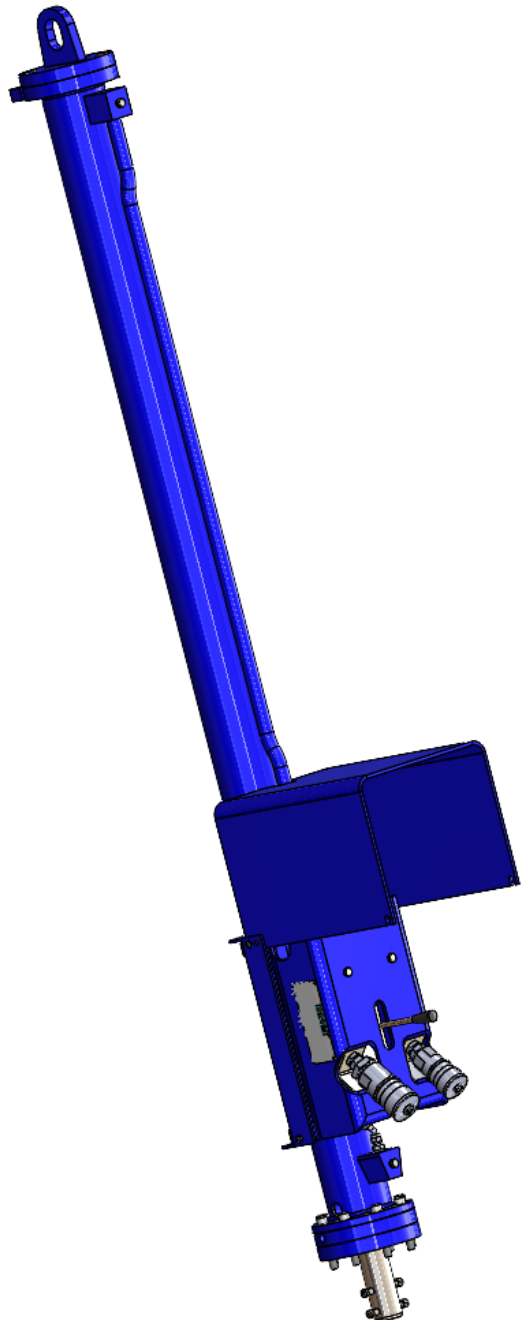

Function	Rating/Operating Dimensions
Maximum Operating Pressure	1480 PSI @ 100°F
Maximum Operating Temperature	-20°F to 180°F @ 1376 PSI
Maximum Test Pressure	1480 PSI with 600# Flange
Maximum Bar Travel	72”
Normal Line Stop Range	150# & 600#
Size Range	3” – 12”
Attaching Flange	
O-ring	Smooth Face
RTJ	4” 600#
Attaching Flange Bolt Size	
O-ring	½”- 13 x 3-1/2”
RTJ	
Flat Faced RTJ Flange	⅞”-9 x 3”
Raced Face RTJ Flange	⅞”-9 x 3-1/2”
RTJ Gasket Size	R 37
O-Ring Size	#427 (5.276” OD x 4.725” ID 0.275” Cross Section) #348 (4.770” OD x 4.350” ID 0.210” Cross Section) #344 (4.270” OD x 3.850” ID 0.210” Cross Section)
Control Bar Diameter	2”
Control Bar Bolt Size	⅜” x 3” Shoulder Bolt
Control Bar Bolt Nut Size	5/16”- 18
Bar Lock Wrench Size	⅜” Hex Key
Weight With Out Housing	235 LBS

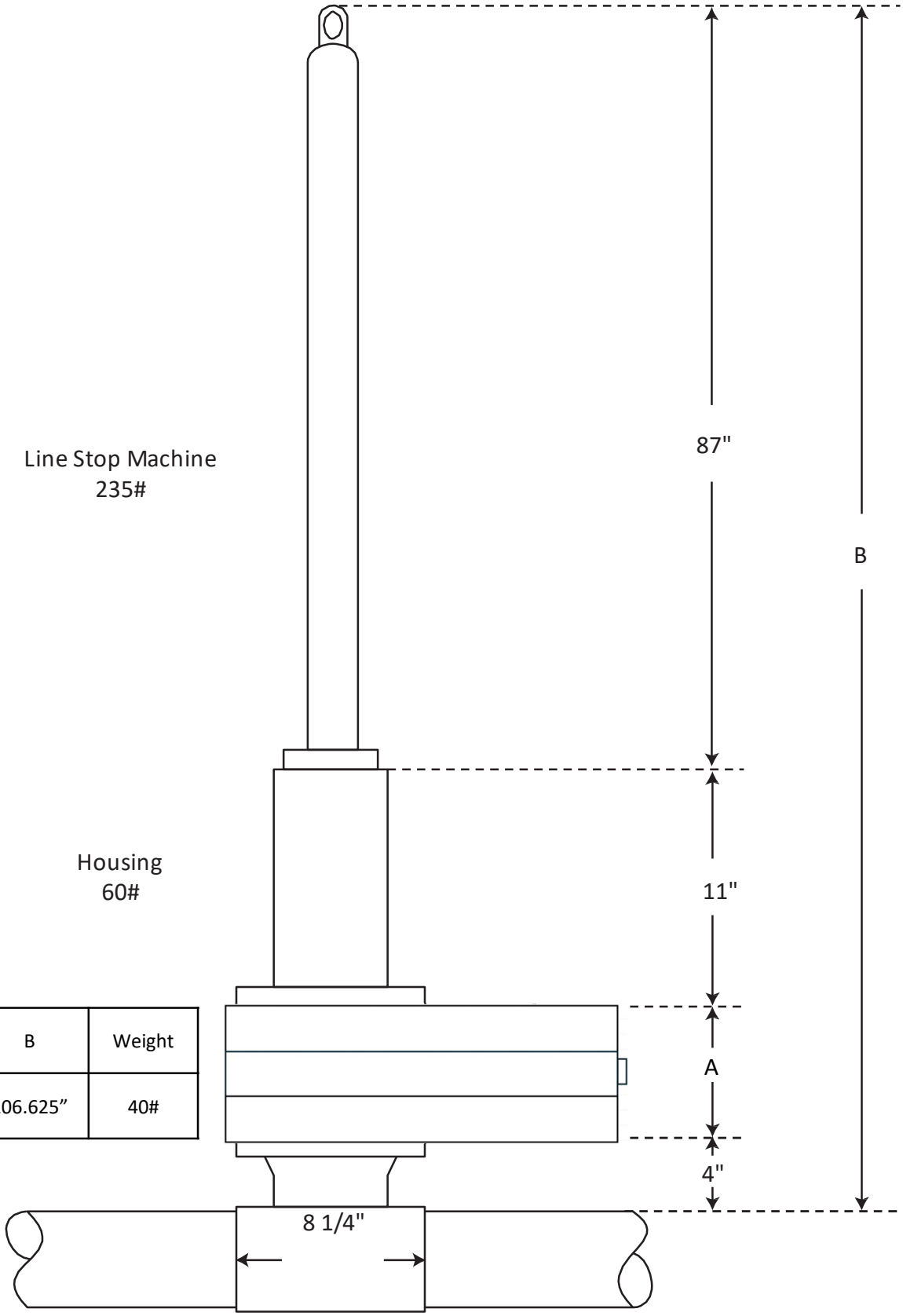

Valve Type	A	B	Weight
Sandwich Type	4.625”	106.625”	40#

4 - 12 Hydraulic Line Stop Machine 3" 150# Line Stop

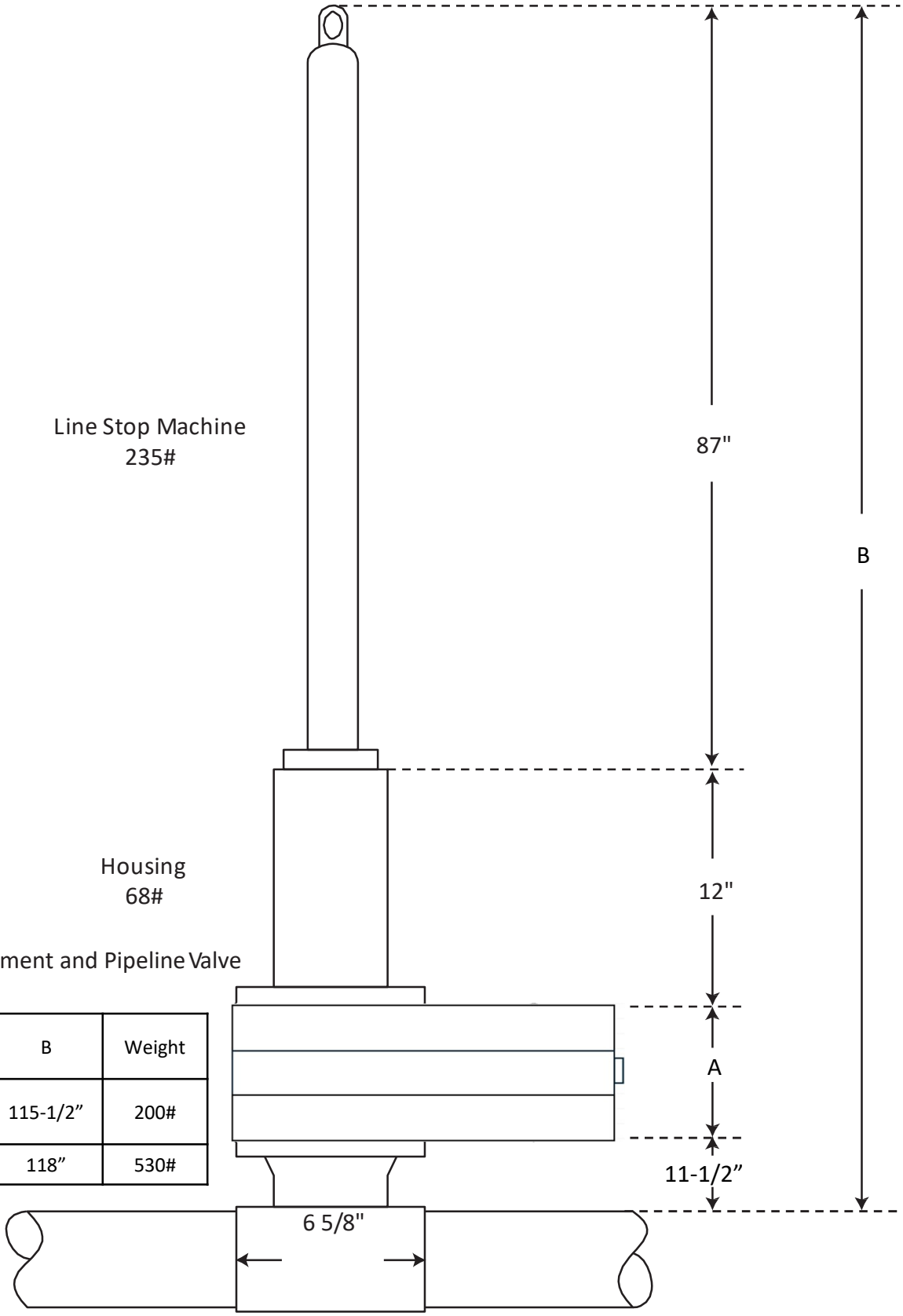

4" 600# Line Stop Equipment and Pipeline Valve

Valve Type	A	B	Weight
Sandwich Type	5”	115-1/2”	200#
M&J	7.5”	118”	530#

4 - 12 Hydraulic Line Stop Machine 3" 600# Line Stop

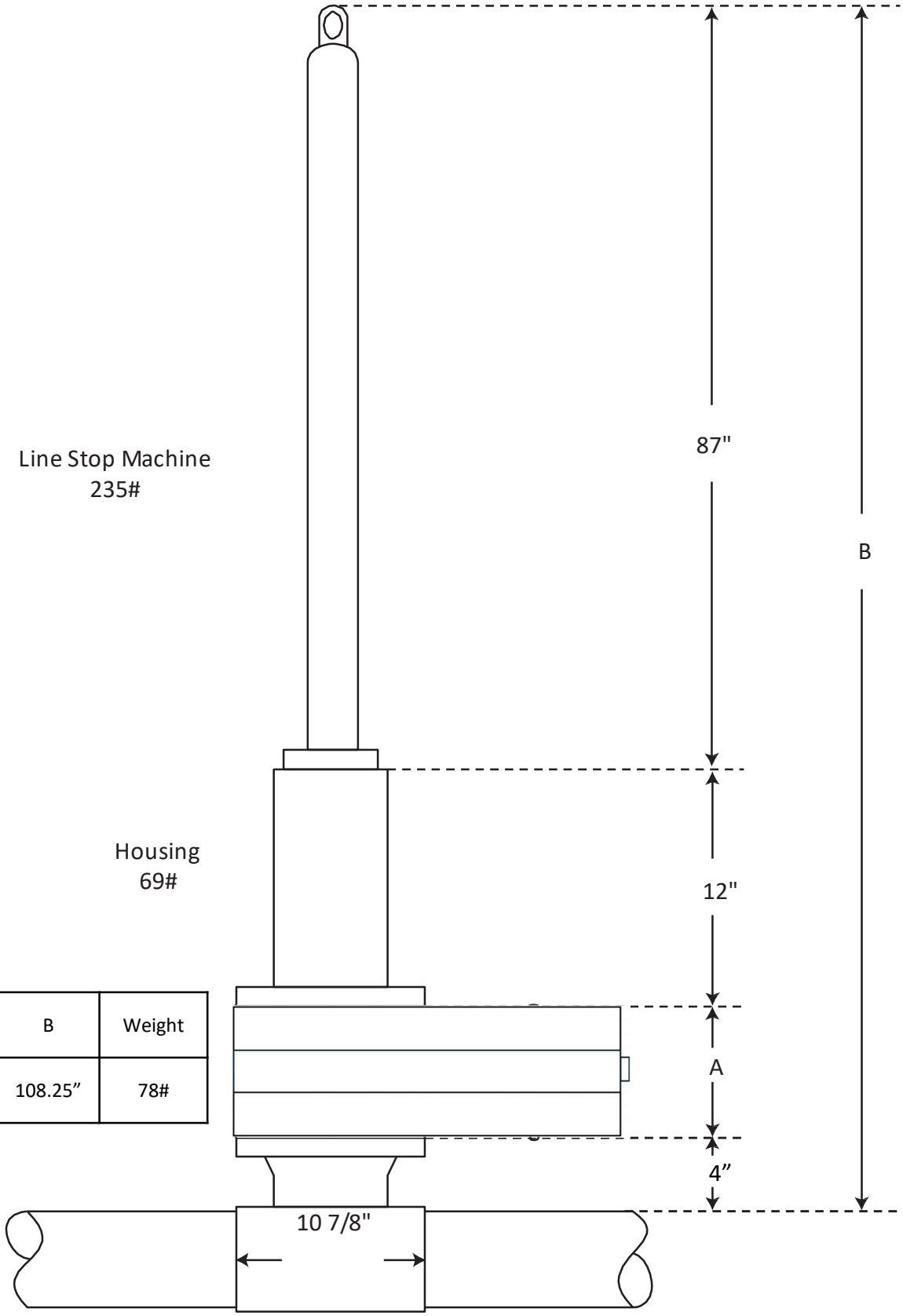

Valve Type	A	B	Weight
Sandwich Type	5.250”	108.25”	78#

4 - 12 Hydraulic Line Stop Machine 4" 150# Line Stop

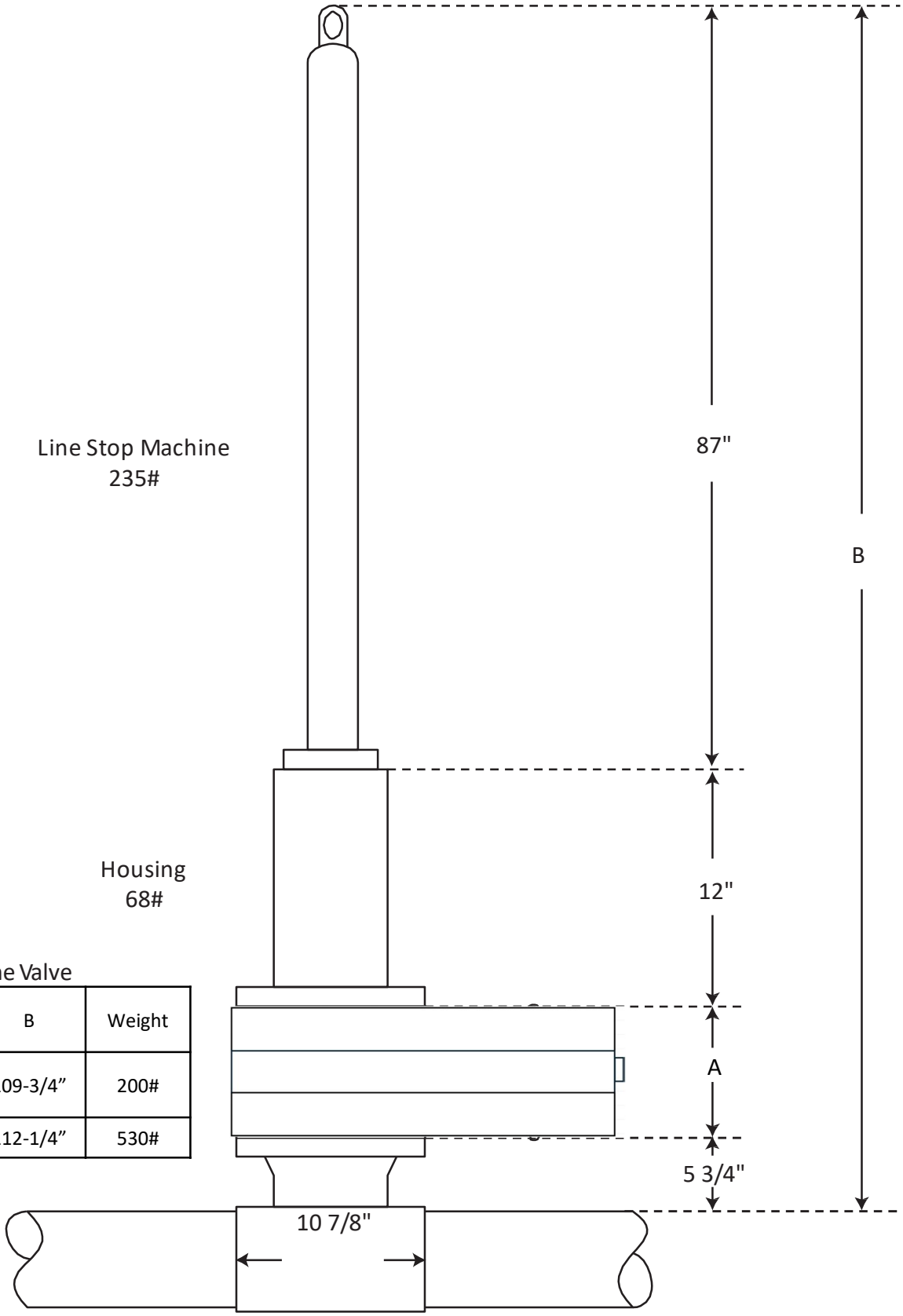

4" 600# Pipeline Valve

Valve Type	A	B	Weight
Sandwich Type	5”	109-3/4”	200#
M&J	7.5”	112-1/4”	530#

4 - 12 Hydraulic Line Stop Machine 4" 600# Line Stop

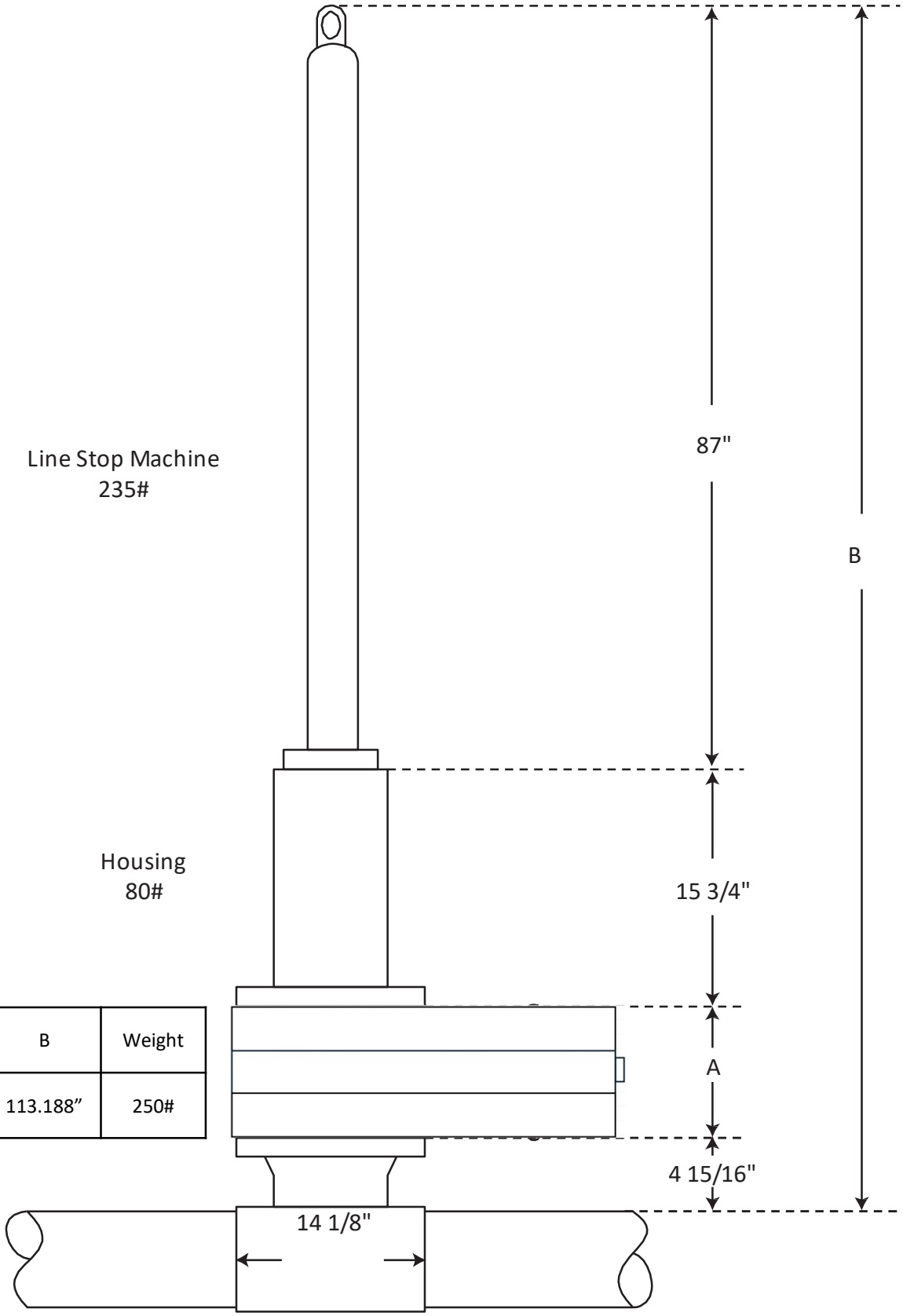

Valve Type	A	B	Weight
Sandwich Type	5.5”	113.188”	250#

4 - 12 Hydraulic Line Stop Machine 6" 150# Line Stop

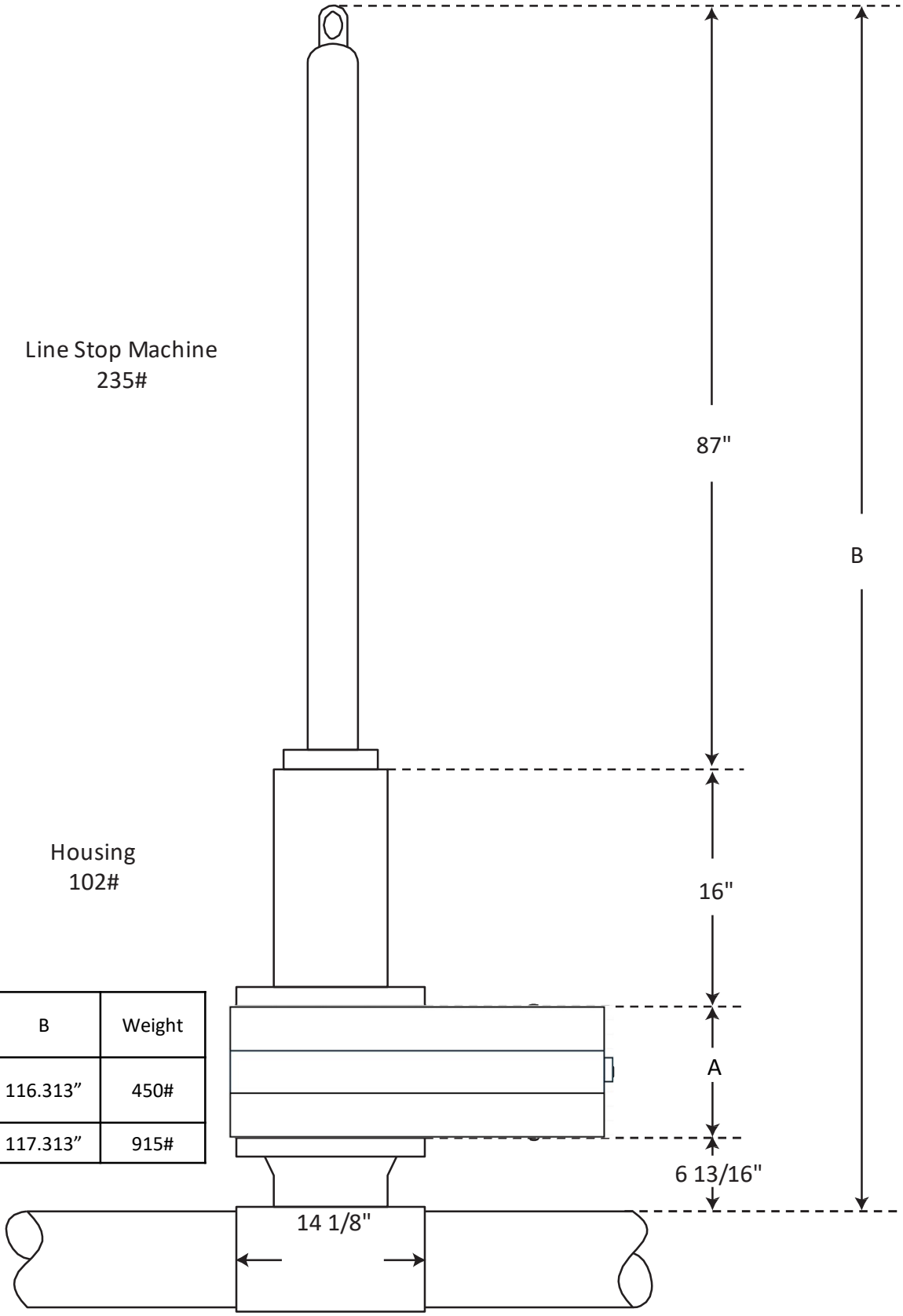

Valve Type	A	B	Weight
Sandwich Type	6.5”	116.313”	450#
M&J	7.5”	117.313”	915#

4 - 12 Hydraulic Line Stop Machine 6" 600# Line Stop

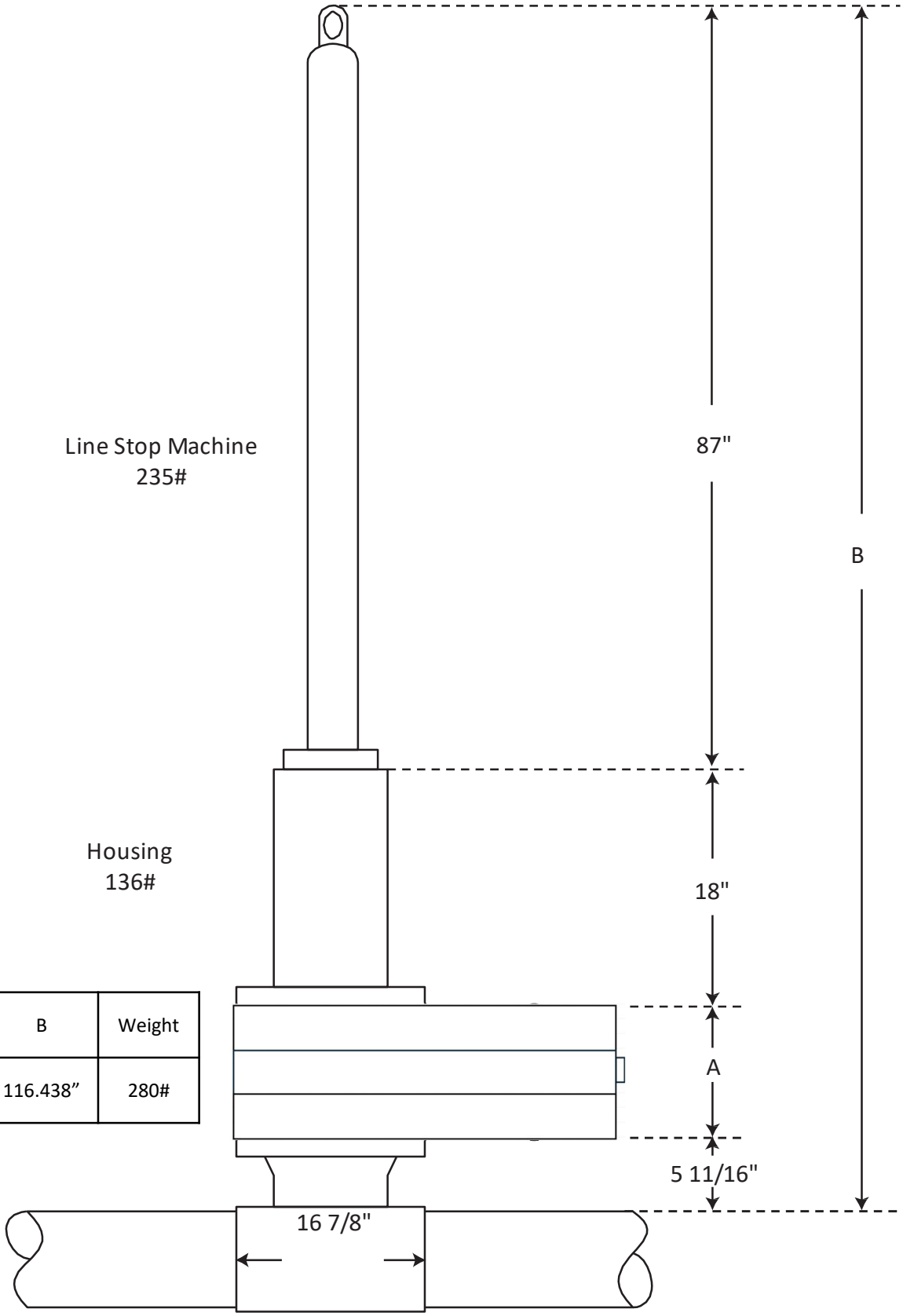

Valve Type	A	B	Weight
Sandwich Type	5.750”	116.438”	280#

4 - 12 Hydraulic Line Stop Machine 8" 150# Line Stop

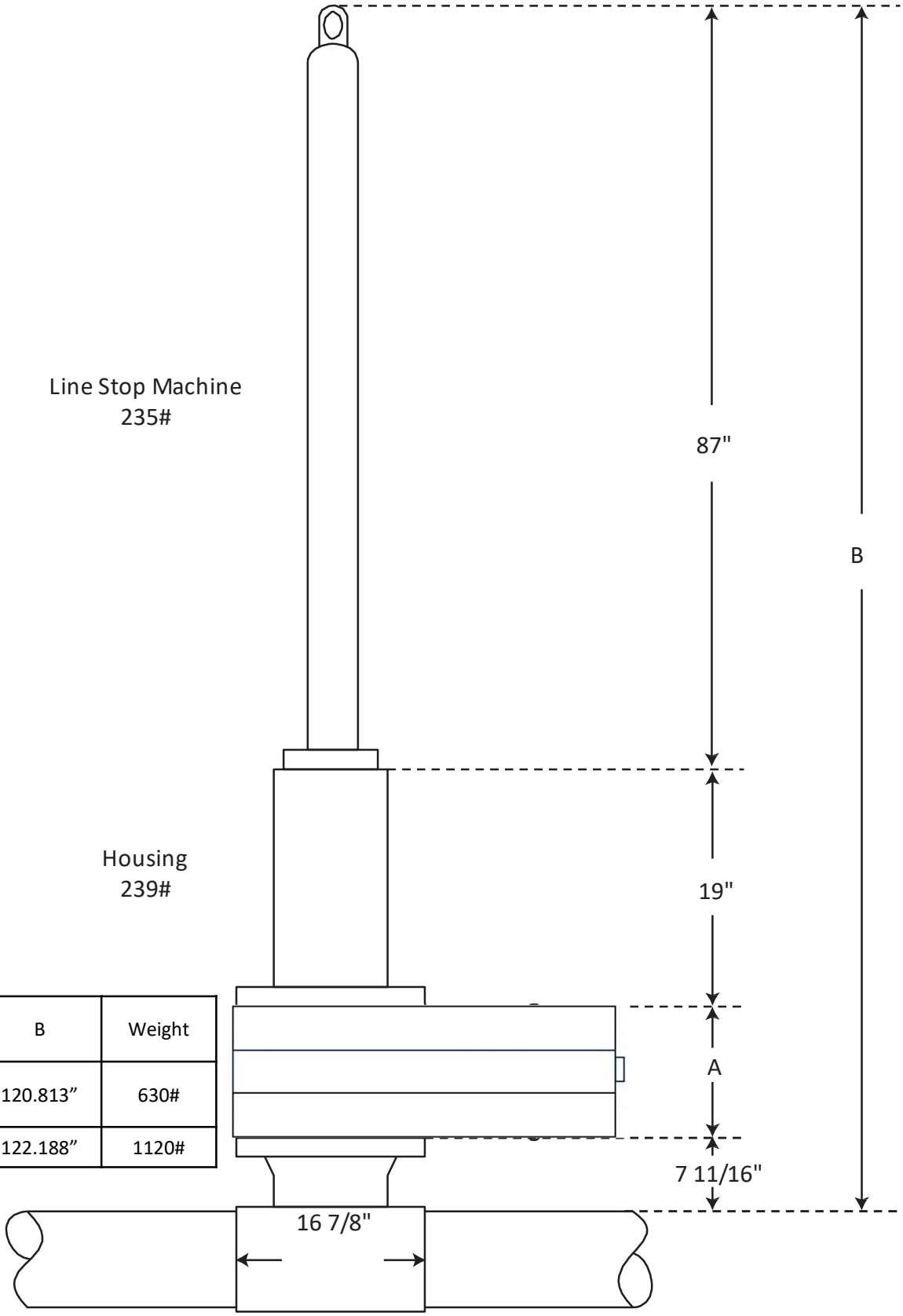

Valve Type	A	B	Weight
Sandwich Type	7.125”	120.813”	630#
M&J	8.5”	122.188”	1120#

4 - 12 Hydraulic Line Stop Machine 8" 600# Line Stop

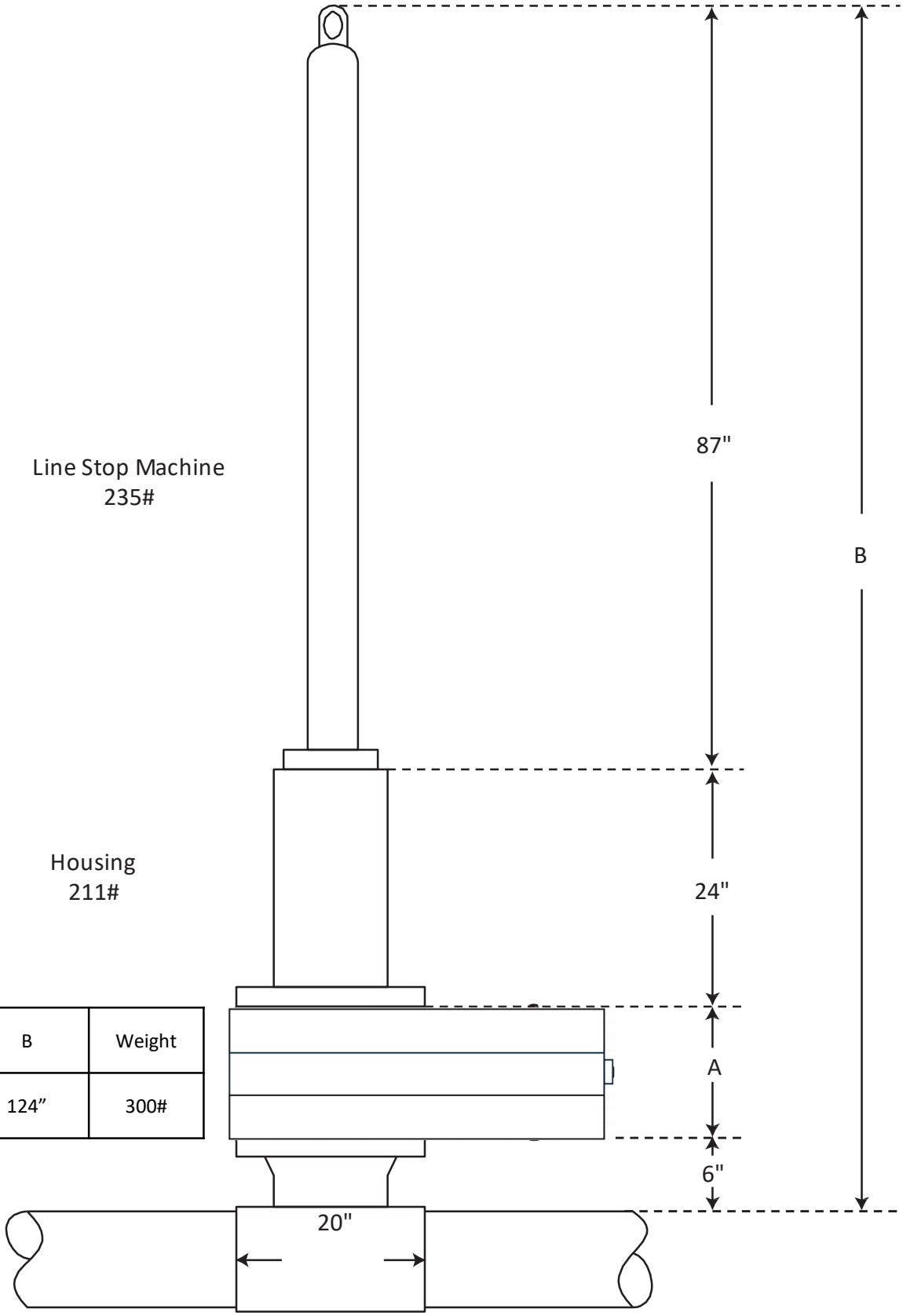

Valve Type	A	B	Weight
Sandwich Type	7”	124”	300#

4 - 12 Hydraulic Line Stop Machine 10" 150# Line Stop

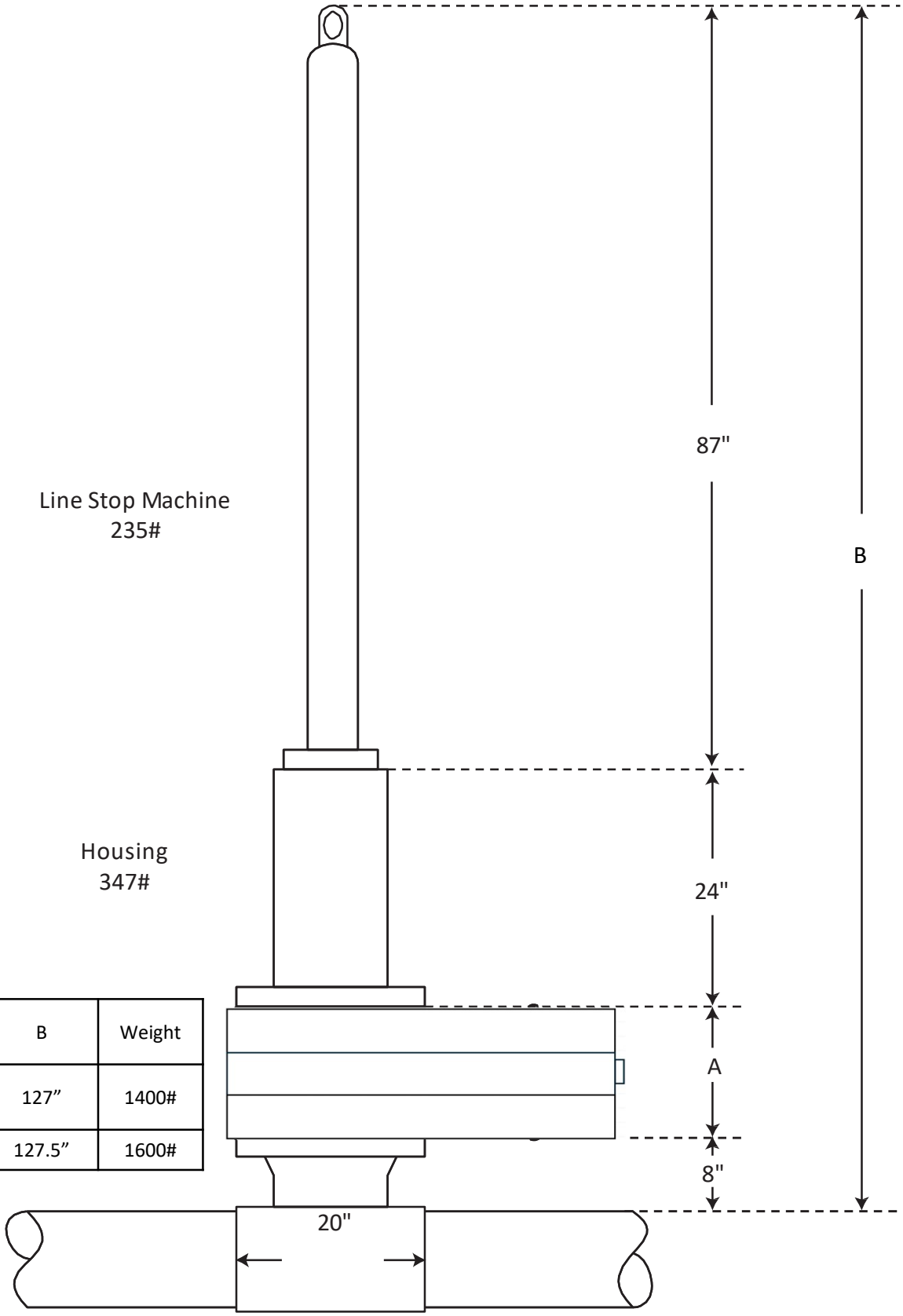

Valve Type	A	B	Weight
Sandwich Type	8”	127”	1400#
M&J	8.5”	127.5”	1600#

4 - 12 Hydraulic Line Stop Machine 10" 600# Line Stop

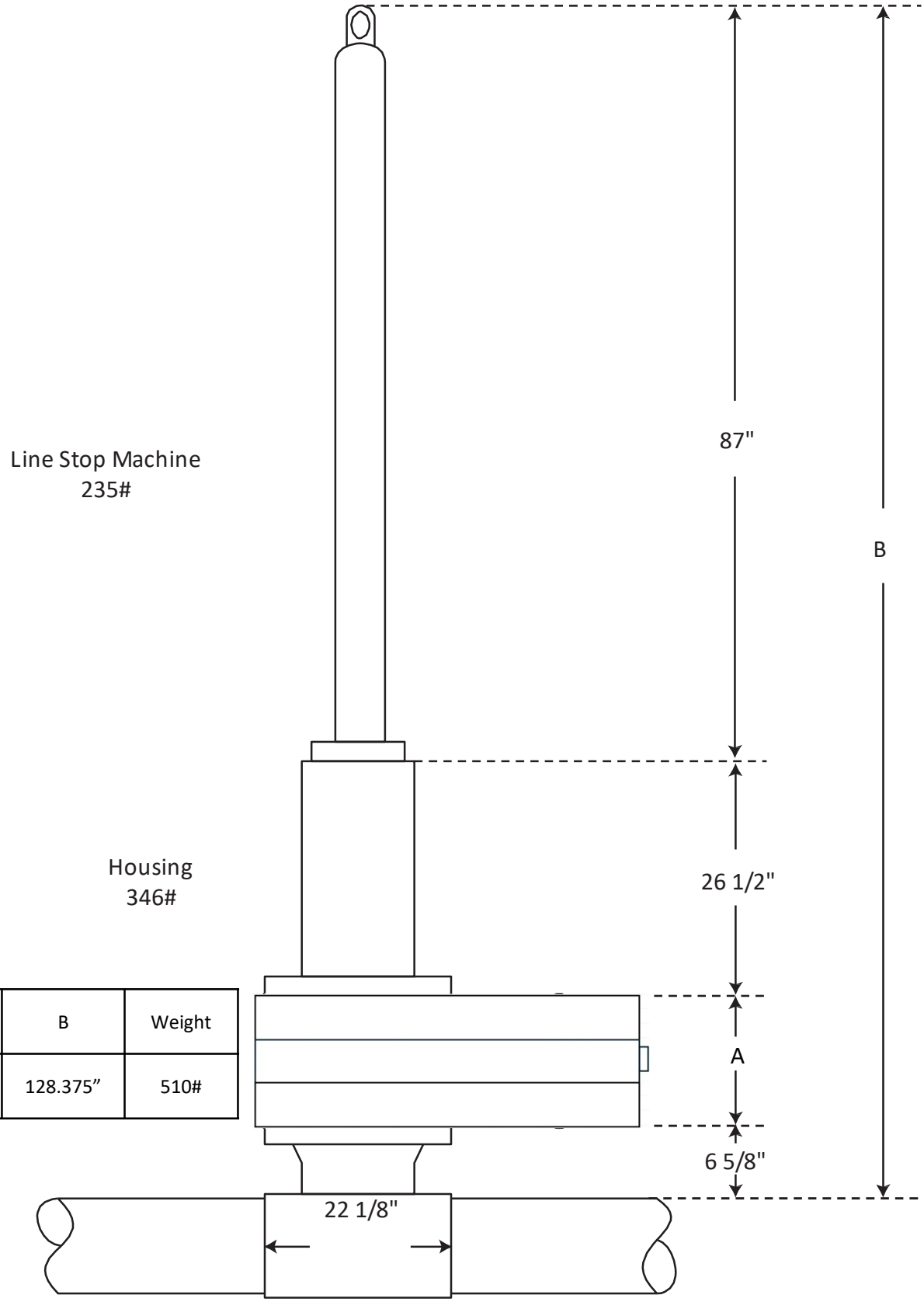

Valve Type	A	B	Weight
Sandwich Type	8.25”	128.375”	510#

4 - 12 Hydraulic Line Stop Machine 12" 150# Line Stop

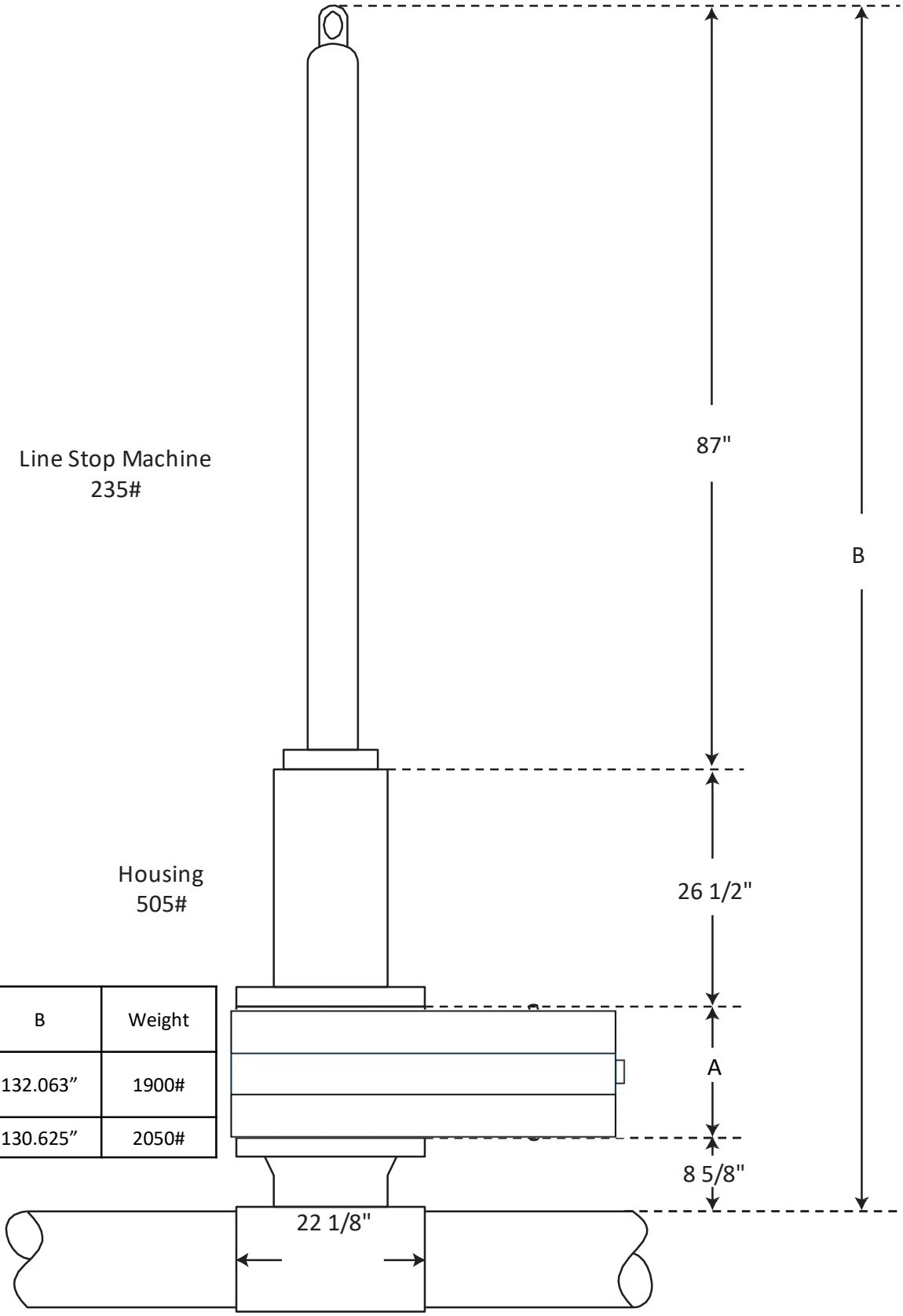

Valve Type	A	B	Weight
Sandwich Type	9.938”	132.063”	1900#
M&J	8.5”	130.625”	2050#

4 - 12 Hydraulic Line Stop Machine 12" 600# Line Stop